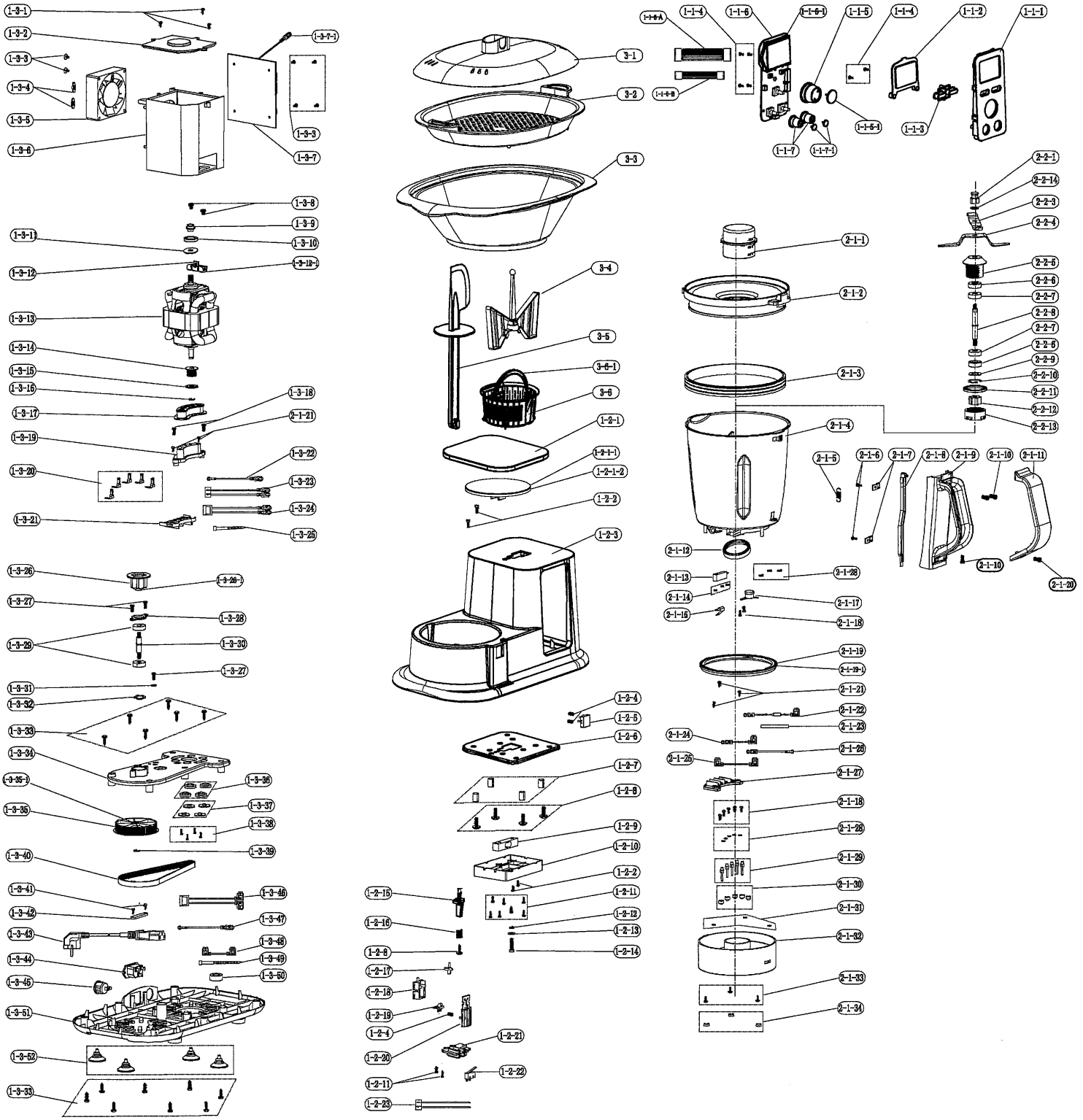
1-3-1
1-3-2
1-3-3
1-3-4
1-3-5
1-3-6
1-3-7-1
1-3-3
1-3-7
1-3-8
1-3-9
1-3-11
1-3-10
1-3-12
1-3-12-1
1-3-13
1-3-14
1-3-15
1-3-16
1-3-17
1-3-18
2-1-21
1-3-19
1-3-22
1-3-20
1-3-23
1-3-24
1-3-21
1-3-25
1-3-26
1-3-26-1
1-3-27
1-3-28
1-3-29
1-3-30
1-3-27
1-3-31
1-3-32
1-3-33
1-3-34
1-3-36
1-3-35-1
1-3-37
1-3-35
1-3-38
1-3-39
1-3-40
1-3-41
1-3-46
1-3-42
1-3-47
1-3-43
1-3-48
1-3-44
1-3-49
1-3-45
1-3-50
1-3-51
1-3-52
1-3-53
3-1
3-2
3-3
3-4
3-5
3-6-1
3-6
1-2-1
1-2-1-1
1-2-1-2
1-2-2
1-2-3
1-2-4
1-2-5
1-2-6
1-2-7
1-2-8
1-2-9
1-2-10
1-2-2
1-2-11
1-2-15
1-2-12
1-2-16
1-2-13
1-2-8
1-2-14
1-2-17
1-2-18
1-2-19
1-2-4
1-2-21
1-2-20
1-2-22
1-2-11
1-2-23
1-1-6-A
1-1-4
1-1-6
1-1-6-1
1-1-5
1-1-4
1-1-2
1-1-1
1-1-6-B
1-1-6-4
1-1-3
1-1-7
1-1-7-1
2-2-1
2-2-14
2-2-3
2-2-4
2-1-1
2-2-5
2-2-6
2-1-2
2-2-7
2-2-8
2-2-7
2-2-6
2-2-9
2-1-3
2-2-10
2-2-11
2-2-12
2-1-4
2-2-13
2-1-5
2-1-6
2-1-7
2-1-8
2-1-9
2-1-10
2-1-11
2-1-10
2-1-20
2-1-12
2-1-13
2-1-28
2-1-14
2-1-17
2-1-16
2-1-18
2-1-19
2-1-19-1
2-1-21
2-1-22
2-1-23
2-1-24
2-1-28
2-1-25
2-1-27
2-1-18
2-1-28
2-1-29
2-1-30
2-1-31
2-1-32
2-1-33
2-1-34